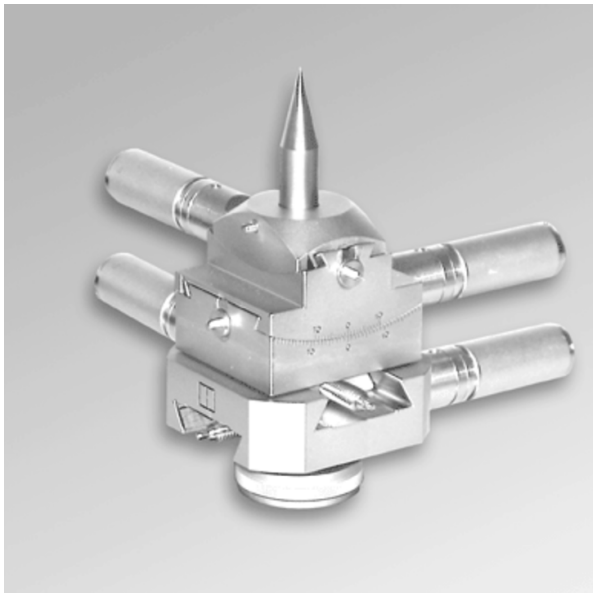

Goniometer Head 1003-MG

The Goniometer Head 1003-MG is driven by four DC motors.

Limit switches can be optionally equipped to limit the operational range.

It is possible to equip the goniometer head with encoders enabling a defined positional movement.

Adjustable axes:	X, Y, Ry, Rx
Range X [mm]:	+/- 11
Range Y [mm]:	+/- 11
Range Ry [°]:	+/- 18
Range Rx [°]:	+/- 18
Height [mm]:	107
Read-out accuracy [°]:	0.1
Max. load [N]:	50
Weight [kg]:	2.0

Accessories

Mounts	1055
	1412
Controller	SMC 9300

Technical data motor:

Type:	Faulhaber 1516-012S
Voltage [V]:	12
Power [W]:	0.31
Resistance [Ohm]:	115
Gear box type:	15/5
Gear box Ratio:	1670:1
Insulation class:	B

Included

- adjustment pin
- goniometer head key
- adhesive wax

Further versions:

- vacuum suitable
- radiation resistant

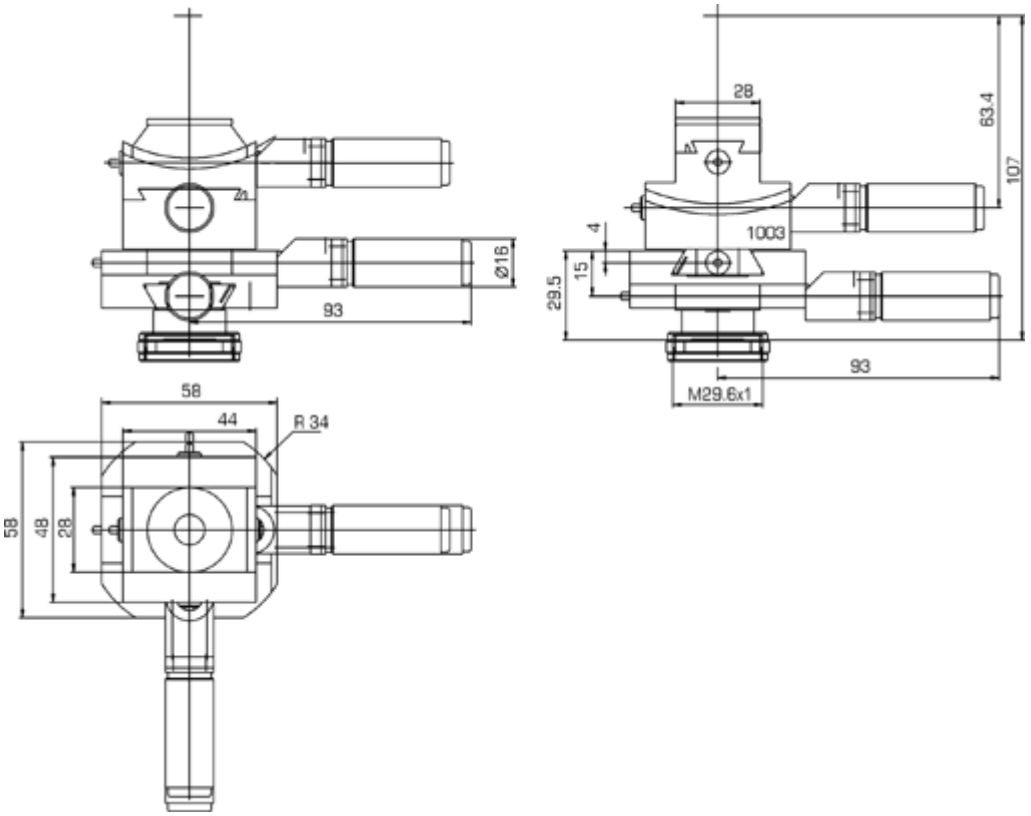
Ø16
93
28
63.4
107
4
1003
15
29.5
93
M29.6x1
58
44
R 34
58
48
28